TAPTITE II® Screws and Bolts

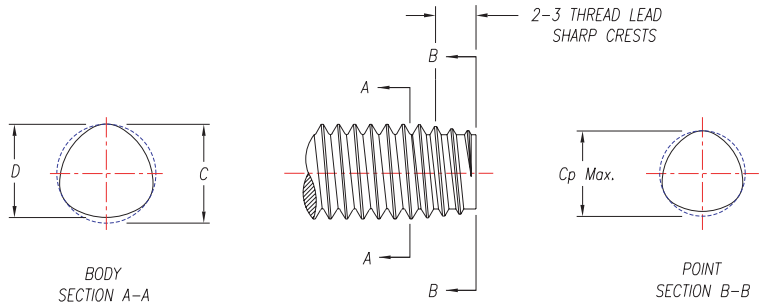

Length Tolerance - Inch - Per ANSI B18.6.3		
Nominal Screw Length	Nominal Screw Size	
	#4 - #12	1/4" - 1/2"
	Tolerance On Length	
To 1/2" Inclusive	+0, - .020	+0, - .030
Over 1/2" to 1" Inclusive	+0, - .030	+0, - .030
Over 1" to 2" Inclusive	+0, - .060	+0, - .060
Over 2"	+0, - .090	+0, - .090

Length Tolerance - Metric - Per ANSI B18.6.7M	
Nominal Screw Length	Tolerance on Length mm
to 3mm incl	± 0.2
over 3 to 10mm	± 0.3
over 10 to 16mm	± 0.4
over 16 to 50mm	± 0.5
over 50mm	± 1.0

TAPTITE II® Thread Rolling Screws

TAPTITE II® thread rolling screws have the TRILOBULAR™ shape which reduces friction during thread forming, provides prevailing torque which exceeds the level of locking screws, and most importantly, inherently provides resistance to vibrational loosening.

The TRILOBULAR™ engineering principles used to create TAPTITE II® screws create an efficient thread rolling screw in all sizes and pitches allowing the manufacture and efficient use of production screws in Sizes 00/M1 to as large as 1"/M24. Only TAPTITE II® screws can make this claim. Competing designs are not typically manufactured above M5 size and certainly not available up to M24 as are TAPTITE II® screws.

To utilize the in-place cost savings and performance benefits of TAPTITE II® screws in large sizes in structural applications, the combination of CORFLEX®-I selective hardening (See Page 21) is highly beneficial. CORFLEX®- I TAPTITE II® bolts can be used where high-strength grade-strength level bolts are required.

NOMINAL SCREW SIZE	SCREW BODY DIMENSIONS				POINT
	C		D		C_p
	Max.	Min.	Max.	Min.	Maximum
Metric Sizes (mm)					
M1.6 x 0.35	1.66	1.58	1.59	1.51	1.31
M2.0 x 0.40	2.06	1.98	1.98	1.90	1.67
M2.5 x 0.45	2.57	2.48	2.48	2.39	2.13
M3.0 x 0.50	3.07	2.98	2.97	2.88	2.58
M3.5 x 0.60	3.58	3.48	3.46	3.36	3.00
M4.0 x 0.70	4.08	3.98	3.94	3.84	3.40
M4.5 x 0.75	4.59	4.48	4.44	4.33	3.85
M5.0 x 0.80	5.09	4.98	4.93	4.82	4.31
M6.0 x 1.00	6.10	5.97	5.90	5.77	5.13
M7.0 x 1.00	7.10	6.97	6.90	6.77	6.13
M8.0 x 1.25	8.13	7.97	7.88	7.72	6.91
M10 x 1.50	10.15	9.97	9.85	9.67	8.69
M12 x 1.75	12.18	11.97	11.83	11.62	10.47
M14 x 2.00	14.20	13.97	13.80	13.57	12.25
M16 x 2.00	16.20	15.97	15.80	15.57	14.25
Inch Sizes (in)					
00-90	0.0481	0.0451	0.0461	0.0431	0.037
0-80	0.0613	0.0583	0.0588	0.0558	0.049
1-64	0.0745	0.0715	0.0715	0.0685	0.059
2-56	0.0875	0.0835	0.0840	0.0800	0.070
3-48	0.1010	0.0970	0.0970	0.0930	0.081
4-40	0.1145	0.1105	0.1095	0.1055	0.090
5-40	0.1275	0.1235	0.1225	0.1185	0.103
6-32	0.1410	0.1350	0.1350	0.1290	0.111
8-32	0.1670	0.1610	0.1610	0.1550	0.137
10-24	0.1940	0.1880	0.1860	0.1800	0.153
10-32	0.1930	0.1870	0.1870	0.1810	0.163
12-24	0.2200	0.2140	0.2120	0.2060	0.179
1/4-20	0.2550	0.2490	0.2450	0.2390	0.206
5/16-18	0.3180	0.3120	0.3070	0.3010	0.264
3/8-16	0.3810	0.3750	0.3685	0.3625	0.320
7/16-14	0.4445	0.4385	0.4305	0.4245	0.375
1/2-13	0.5075	0.5015	0.4920	0.4860	0.432
9/16-12	0.5710	0.5630	0.5540	0.5460	0.490
5/8-11	0.6340	0.6260	0.6160	0.6080	0.545

Hole Size Information

Suggested hole sizes for TAPTITE II®, DUO-TAPTITE® and TAPTITE® CA Screws and Bolts at various percentages of thread engagement

Metric Sizes (mm)

NOMINAL SCREW SIZE	PERCENT THREAD													
	100	95	90 (1)	85 (1)	80	75	70	65	60	55	50	45	40	35
	PILOT HOLE SIZES													
M2.5 x 0.45	2.21	2.22	2.24	2.25	2.27	2.28	2.29	2.31	2.32	2.34	2.35	2.37	2.38	2.40
M3 x 0.5	2.67	2.69	2.71	2.72	2.74	2.76	2.77	2.79	2.80	2.82	2.84	2.85	2.87	2.90
M3.5 x 06	3.11	3.13	3.15	3.17	3.19	3.21	3.23	3.25	3.27	3.29	3.30	3.32	3.34	3.36
M4 x 0.7	3.54	3.57	3.59	3.61	3.64	3.66	3.68	3.70	3.73	3.75	3.77	3.79	3.80	3.84
M4.5 x 0.75	4.01	4.04	4.06	4.09	4.11	4.13	4.16	4.18	4.21	4.23	4.26	4.28	4.30	4.33
M5 x 0.8	4.48	4.51	4.53	4.56	4.58	4.61	4.64	4.66	4.69	4.71	4.74	4.77	4.79	4.82
M6 x 1.0	5.35	5.38	5.42	5.45	5.48	5.51	5.54	5.58	5.61	5.64	5.67	5.71	5.74	5.77
M6.3 x 1.0	5.65	5.68	5.72	5.75	5.78	5.81	5.84	5.88	5.91	5.94	5.97	6.01	6.04	6.07
M7 x 1.0	6.35	6.38	6.42	6.45	6.48	6.51	6.54	6.58	6.61	6.64	6.67	6.71	6.74	6.77
M8 x 1.25	7.19	7.23	7.27	7.31	7.35	7.39	7.43	7.47	7.51	7.55	7.59	7.63	7.67	7.72
M10 x 1.5	9.03	9.07	9.12	9.17	9.22	9.27	9.32	9.37	9.41	9.46	9.51	9.56	9.61	9.66
M12 x 1.75	10.86	10.92	10.98	11.03	11.09	11.15	11.20	11.26	11.31	11.37	11.43	11.49	11.55	11.60

Inch Sizes (in)

NOMINAL SCREW SIZE	PERCENT THREAD													
	100	95	90 (1)	85 (1)	80	75	70	65	60	55	50	45	40	35
	PILOT HOLE SIZES													
2-56	.0744	.0750	.0756	.0761	.0767	.0773	.0779	.0785	.0790	.0796	.0802	.0808	.0814	.0819
3-48	.0855	.0861	.0868	.0875	.0882	.0888	.0895	.0902	.0909	.0916	.0922	.0929	.0936	.0943
4-40	.0958	.0966	.0974	.0982	.0990	.0998	.1006	.1014	.1023	.1031	.1039	.1047	.1055	.1063
5-40	.1088	.1096	.1104	.1112	.1120	.1128	.1136	.1144	.1153	.1161	.1169	.1177	.1185	.1193
6-32	.1177	.1187	.1197	.1207	.1218	.1228	.1238	.1248	.1258	.1268	.1278	.1289	.1299	.1309
8-32	.1437	.1447	.1457	.1467	.1478	.1488	.1498	.1508	.1518	.1528	.1538	.1549	.1559	.1569
10-24	.1629	.1643	.1656	.1670	.1683	.1697	.1710	.1724	.1738	.1751	.1765	.1778	.1792	.1805
10-32	.1697	.1707	.1717	.1727	.1738	.1748	.1758	.1768	.1778	.1788	.1798	.1809	.1819	.1829
12-24	.1889	.1903	.1916	.1930	.1943	.1957	.1970	.1984	.1998	.2011	.2025	.2038	.2052	.2065
1/4-20	.2175	.2191	.2208	.2224	.2240	.2256	.2273	.2289	.2305	.2321	.2338	.2354	.2370	.2386
5/16-18	.2764	.2782	.2800	.2818	.2836	.2854	.2872	.2890	.2908	.2926	.2944	.2963	.2981	.2999
3/8-16	.3344	.3364	.3384	.3405	.3425	.3445	.3466	.3486	.3506	.3527	.3547	.3567	.3588	.3608
7/16-14	.3911	.3934	.3957	.3980	.4004	.4027	.4050	.4073	.4096	.4120	.4143	.4166	.4189	.4213
1/2-13	.4500	.4525	.4550	.4575	.4600	.4625	.4650	.4675	.4700	.4725	.4750	.4775	.4800	.4825

EXAMPLE – The shaded area indicates that an M5 – 0.8 screw size in a 4.58 hole size provides 80% thread engagement.

Because the above values are based on a linear relation between hole size and percentage thread engagement, the hole data becomes less accurate for engagements less than 70%.

Note also, these holes are based on the U.S. basic thread depth of .6495 times the pitch and are calculated using nominal screw diameters.
Hole = D - (0.6495 x P x %), where D = nominal screw diameter.

(1) Pilot holes listed under 90% & 85% (Thread Percent) also recommended for single punch extruded holes. - See Page 11

For Pilot Hole Tolerance in terms of thread percentage, we suggest +5% to -10% of the nominal, percent thread value.

EXAMPLE; If 80% is the percent thread for the nominal hole, the minimum hole would yield 85% thread and the maximum hole would yield 70% thread.

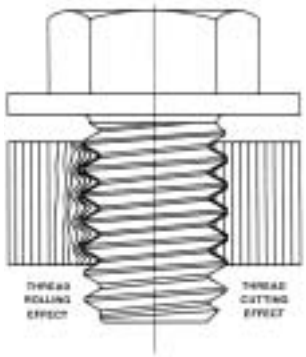

Recommended pilot hole sizes for TAPTITE II®, DUO-TAPTITE® and TAPTITE® CA Screws and Bolts for steel nut member thicknesses

(Expressed in terms of screw diameters)

Metric Sizes (mm)

Application Duty Class	Light 0.3 Diameter of Material			Medium-Light 0.5 Diameter of Material			Medium-Heavy 0.75 Diameter of Material			Full Strength 1.0 Diameter of Material			Extended 1.25 Diameter of Material		
Percentage of Thread	90%			85%			80%			75%			70%		
Nominal Size	Material Thickness	Pilot Hole	Drill Size	Material Thickness	Pilot Hole	Drill Size	Material Thickness	Pilot Hole	Drill Size	Material Thickness	Pilot Hole	Drill Size	Material Thickness	Pilot Hole	Drill Size
M2.5 x 0.45	0.5-0.9	2.24	2.25	0.9-1.5	2.25	2.25	1.5-2.1	2.27	#43 2.26	2.1-2.7	2.28	#43 2.26	2.7-3.5	2.30	2.30
M3 x 0.5	0.5-1.1	2.71	#36 2.71	1.1-1.7	2.72	#36 2.71	1.7-2.7	2.74	2.75	2.7-3.3	2.76	2.75	3.3-4.0	2.77	7/64" 2.78
M3.5 x 0.6	0.6-1.4	3.15	1/8" 3.18	1.4-2.0	3.17	1/8" 3.18	2.0-2.9	3.19	3.2	2.9-3.8	3.21	3.2	3.8-4.5	3.23	3.25
M4 x 0.7	0.8-1.4	3.59	3.6	1.4-2.4	3.61	3.60	2.4-3.3	3.64	#27 3.66	3.3-4.4	3.66	#27 3.66	4.4-5.5	3.68	3.7
M4.5 x 0.75	0.9-1.7	4.06	#21 4.04	1.7-2.7	4.09	#20 4.09	2.7-3.9	4.11	4.1	3.9-4.9	4.13	4.1	4.9-6.4	4.16	4.2
M5 x 0.8	1.0-2.1	4.53	4.5	2.1-2.9	4.56	#15 4.57	2.9-4.4	4.58	#15 4.57	4.4-5.9	4.61	4.6	5.9-7.1	4.64	#14 4.62
M6 x 1.0	1.2-2.4	5.42	#3 5.41	2.4-3.6	5.45	#3 5.41	3.6-4.9	5.48	5.5	4.9-6.9	5.51	5.5	6.9-8.1	5.55	7/32" 5.56
M6.3 x 1.0	1.3-2.4	5.72	5.7	2.4-3.7	5.75	5.75	3.7-4.9	5.78	5.75	4.9-7.4	5.81	5.8	7.4-8.9	5.85	5.80
M7 x 1.0	1.4-2.4	6.42	6.4	2.4-4.4	6.45	6.40	4.4-6.5	6.48	6.5	6.4-7.7	6.51	6.5	7.7-9.5	6.55	F 6.53
M8 x 1.25	1.6-3.1	7.27	7.25	3.1-4.9	7.31	7.30	4.6-6.9	7.35	L 7.37	6.9-8.9	7.39	L 7.4	8.9-10.9	7.43	7.4
M10 x 1.50	1.9-3.9	9.12	23/64" 9.10	3.9-5.9	9.17	9.20	5.9-8.3	9.22	9.20	8.3-10.9	9.27	9.25	10.9-12.9	9.32	9.3
M12 x 1.75	2.4-4.9	10.98	11.0	4.9-7.4	11.03	11.0	7.4-10.5	11.09	7/16" 11.11	10.5-14.5	11.15	7/16" 11.11	14.5-17.0	11.2	7/16" 11.11

Inch Sizes (in)

Application Duty Class	Light 0.3 Diameter of Material			Medium-Light 0.5 Diameter of Material			Medium-Heavy 0.75 Diameter of Material			Full Strength 1.0 Diameter of Material			Extended 1.25 Diameter of Material		
Percentage of Thread	90%			85%			80%			75%			70%		
Nominal Size	Material Thickness	Pilot Hole	Drill Size	Material Thickness	Pilot Hole	Drill Size	Material Thickness	Pilot Hole	Drill Size	Material Thickness	Pilot Hole	Drill Size	Material Thickness	Pilot Hole	Drill Size
2-56	.017-.034	.0756	1.9mm .0748	.034-.052	.0761	#48 .076	.052-.073	.0767	1.95mm .0763	.073-.095	.0773	5/64 .0781	.095-.169	.0779	5/64 .0781
3-48	.020-.040	.0868	2.2mm .0866	.040-.059	.0875	2.2mm .0866	.059-.084	.0882	#43 .089	.084-.110	.0888	#43 .089	.110-.141	.0895	#43 .089
4-40	.022-.045	.0974	#40 .098	.045-.067	.0982	#40 .098	.067-.095	.0990	#39 .0995	.095-.126	.0998	#39 .0995	.126-.157	.1006	#39 .0995
5-40	.025-.051	.1104	2.8mm .1102	.051-.075	.1112	#34 .111	.075-.106	.1120	#33 .113	.106-.141	.1128	#33 .113	.141-.175	.1136	#33 .113
6-32	.028-.066	.1197	#31 .120	.066-.083	.1207	#31 .120	.083-.117	.1218	3.1mm .122	.117-.152	.1288	3.1mm .122	.152-.193	.1238	1/8 .125
8-32	.033-.066	.1457	3.7mm .1457	.066-.098	.1467	#26 .147	.098-.141	.1478	3.75mm .1476	.141-.180	.1488	3.8mm .1496	.180-.230	.1498	3.8mm .1496
10-24	.038-.079	.1656	#19 .166	.079-.114	.1670	4.25mm .1673	.114-.162	.1683	#18 .1695	.162-.209	.1697	#18 .1695	.209-.266	.1710	11/64 .1719
10-32	.038-.079	.1717	11/64 .1719	.079-.114	.1727	#17 .173	.114-.162	.1738	#17 .173	.162-.209	.1748	4.4mm .1732	.209-.266	.1758	#16 .177
12-24	.043-.086	.1916	#11 .191	.086-.130	.1930	4.9mm# .1929	.130-.184	.1943	9# .196	.184-.238	.1957	95 .196	.238-.302	.1970	5mm .1969
1/4-20	.050-.100	.2208	#2 .221	.100-.150	.2224	5.7mm .2244	.150-.213	.2240	5.7mm .2244	.213-.275	.2256	5.75mm .2264	.275-.350	.2273	#1 .228
5/16-18	.062-.126	.2800	7.1mm .2795	.126-.188	.2818	9/32 .2812	.188-.266	.2836	7.2mm .2835	.266-.345	.2854	7.25mm .2854	.345-.438	.2872	7.3mm .2874
3/8-16	.075-.150	.3384	8.6mm .3386	.150-.225	.3405	8.6mm .3386	.225-.319	.3425	8.7mm .3425	.319-.413	.3445	8.75mm .3455	.413-.525	.3466	8.8mm .3465
7/16-14	.087-.174	.3957	X .397	.174-.262	.3980	X .397	.262-.371	.4004	X .397	.371-.481	.4027	Y .404	.481-.612	.4050	Y .404
1/2-13	.100-.200	.4550	29/64 .4531	.200-.300	.4575	29/64 .4531	.300-.425	.4600	29/64 .4531	.425-.550	.4625	15/32 .4688	.550-.700	.4650	15/32 .4688

Notes: This chart pertains to steel nut members
APPLICATION DUTY CLASS - A general term used here to group material thickness in terms of screw diameters. For example, the average material thickness listed under "medium-heavy" equals 75% of the screw diameter.

Typical Torque Performance of TAPTITE II® Screws in Cold Rolled Steel

Metric

Screw Size	Plate Thickness	Hole Size	Nearest Drill Size	Thread Forming Torque	Prevailing First Removal Torque	Recom-mended Assembly Torque	Failure Torque
M3 x 0.5	1.0	2.71	#36	.30-.45	.15-.30	1.0	1.5-2.0*
	2.0	2.75	2.75mm	.35-.55	.15-.30	1.0	1.6-2.5*
	3.0	2.75	2.75mm	.50-.80	.25-.40	1.6	2.5-3.5*†
M4 x 0.7	2.0	3.60	3.6mm	.60-.85	.30-.40	1.8	2.8-3.8*
	3.0	3.66	#27	.90-1.3	.50-.70	3.3	5.5-7.5*
	4.0	3.66	#27	1.2-1.6	.60-.85	4.3	7.0-10.0*†
M5 x 0.8	2.5	4.57	#15	1.3-2.0	.60-.80	2.8	5.3-8.0*
	3.5	4.57	#15	1.5-2.7	.90-1.5	6.0	10-12*
	5.0	4.60	4.6mm	2.0-3.0	.90-1.5	7.0	11-14*†
M6 x 1.0	3.0	5.41	#3	2.0-2.8	.60-1.2	5.0	9-13*
	4.5	5.50	5.5mm	3.2-4.5	.90-1.5	10.0	16-21*
	6.0	5.50	5.5mm	3.5-4.8	1.0-1.7	10.0	18-25*†
M8 x 1.25	4.0	7.30	7.3mm	4.8-7.0	1.5-2.8	20.0	33-42*
	6.0	7.37	L	5.5-9.5	2.2-3.6	28.0	43-53*
	8.0	7.37	L	7.0-12	4.0-6.0	30.0	55-65†
M10 x 1.5	5.0	9.20	9.2mm	11-15	5.0-7.0	30.0	53-63*
	8.0	9.20	9.2mm	14-19	6.0-9.0	45.0	80-92*
	10.0	9.25	9.25mm	15-22	7.0-12.0	55.0	92-102*†
M12 x 1.75	6.0	11.00	11.0mm	23-29	7.0-13.0	60.0	108-130*
	9.0	11.11	7/16	25-31	9.0-15.0	65.0	115-135*
	12.0	11.11	7/16	30-38	13.0-20.0	100.0	175-200*†

Inch

Screw Size	Plate Thickness	Hole Size	Nearest Drill Size	Thread Forming Torque	Prevailing First Removal Torque	Recom-mended Assembly Torque	Failure Torque
2-56	0.0469	0.075	1.9mm	1-2	.5-1	4	6-7*
	0.0625	0.076	#48	1-2	.5-1	4	8-10*
	0.0938	0.079	#47	1-2	.5-1	5	11-14†
3-48	0.0625	0.087	2.2mm	3-4	1-2	6	14-15*
	0.0938	0.089	#43	3-5	1-2	7	15-16*
	0.1250	0.090	#43	4-6	1-2	7	15-18†
4-40	0.0312	0.098	#40	2-3	1-2	6	8-11*
	0.0625	0.102	2.6mm	3-4	1-2	9	15-18*
	0.0938	0.102	2.6mm	3-4	1-2	11	22-27†
5-40	0.0625	0.111	#34	4-5	2-3	12	22-29*
	0.0938	0.113	#33	4-7	3-4	18	34-41*
	0.1250	0.116	#32	6-8	4-5	20	38-46†
6-32	0.0625	0.120	#31	4-7	3-4	14	25-30*
	0.0938	0.120	#31	6-9	3-5	20	35-45*†
	0.1250	0.125	1/8	6-9	4-6	22	39-45 †
8-32	0.0938	0.147	#26	10-13	5-7	30	65-75*
	0.1250	0.150	3.8mm	11-14	4-7	45	75-85*†
	0.1875	0.150	3.8mm	16-20	8-11	45	75-95 †
10-24	0.0938	0.172	11/64	14-18	5-8	35	65-80*
	0.1250	0.172	11/64	14-18	5-8	45	80-90*
	0.1875	0.172	11/64	17-22	9-13	55	110-115 †
10-32	0.0938	0.173	#17	11-14	9-13	35	80-95*
	0.1250	0.177	#16	12-16	9-13	50	110-120*
	0.1875	0.177	#16	19-25	12-16	70	115-140*
12-24	0.1250	0.196	#9	19-24	9-12	65	95-115*
	0.1875	0.199	#8	21-26	9-13	75	135-155*
	0.2500	0.203	13/64	21-26	10-14	85	150-170 †
1/4-20	0.1250	0.224	5.7mm	30-36	18-25	85	170-195*
	0.1875	0.224	5.7mm	45-55	25-35	125	205-235 †
	0.2500	0.228	#1	55-65	25-35	125	205-235 †
5/16-18	0.1875	0.281	K	75-85	40-50	160	380-410*
	0.2500	0.285	7.25mm	75-85	40-50	225	425-465*†
	0.3125	0.285	7.25mm	80-90	55-65	250	450-500 †
3/8-16	0.2500	0.348	S	90-100	45-55	350	825-875*
	0.3125	0.348	S	110-125	50-60	400	950-1000*
	0.3750	0.354	9mm	95-110	30-45	450	950-1000*
7/16-14	0.3125	0.404	Y	145-165	75-95	500	1000-1150*
	0.3750	0.406	13/32	145-170	60-90	600	1200-1350*
	0.5000	0.406	13/32	195-220	75-105	700	1400-1600†
1/2-13	0.2500	0.465	29/64	150-180	60-80	500	975-1075*
	0.3750	0.469	15/32	185-215	60-90	850	1600-1800*
	0.5000	0.469	15/32	235-275	75-105	1000	1900-2200†

NOTES:

- Torque values for metric sizes in Newton-meters
- Torque values for inch sizes in pound-inches
- Plate dimensions for metric sizes in millimeters and for inch sizes in inches
- Torque values were developed using hex washer head screws, zinc plated plus lubricity wax, driven at low speed under laboratory-controlled conditions.
- Values shown represent the above conditions only and should not be used in lieu of proper application testing. The data is presented to provide the user with an estimate of what could be achieved in an actual application having a thicker or thinner nut member, harder or softer material, different hole or fastener all contribute to variations in torque performance.
- Recommended tightening torque is intended to induce approximately 30,000 to 50,000 psi clamping force.
- Prevailing first removal torque, the torque necessary to remove the screw after the head has been un-seated, is an indication of TAPTITE II® screws inherent resistance of free turning which is an indication of resistance to loosening under vibration, even without screw head being seated.

* Indicates probability that nut threads will strip.

† Indicates probability that screw will break.

Suggested extruded holes in light gauge steel for TAPTITE II® and DUO-TAPTITE® Screws and Bolts

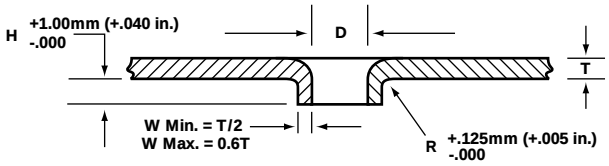

Extruding holes for fasteners in light-gauge steel nearly doubles the length of thread engagement over original material thickness.

TAPTITE II® and DUO-TAPTITE® screws and bolts will develop almost twice the failure torque in extruded holes, providing maximum joint integrity.

The areas of the upper chart indicate that an extruded hole diameter of .146" to .149" is suggested in .060" thick material when using a number 8-32 TAPTITE II® or DUO-TAPTITE® screw. The corresponding H dimension, shown on Page 12, for this hole will be .053" minimum, making the total length of engagement .113" minimum.

mm Thickness	0.5			0.8		1.1		1.6		2.4		3.6		4.4	4.75		5.5				
Inch Thickness		0.02	0.03		0.04		0.06		0.09		0.13		0.16			0.19		0.22	0.25	0.31	0.38
Screw Size	HOLE SIZES - D																				
M2.5 x 0.45	2.21 2.24			2.22 2.26		2.25 2.28		2.27 2.30													
M3 x 0.50	2.68 2.71			2.71 2.74		2.74 2.77		2.77 2.80		2.80 2.83											
M3.5 x 0.60	3.11 3.15			3.13 3.18		3.16 3.21		3.19 3.24		3.24 3.29		3.27 3.32									
6-32		0.118 0.120	0.118 0.121		0.119 0.122		0.120 0.123		0.122 0.125												
M4 x 0.70				3.55 3.59		3.58 3.62		3.60 3.65		3.64 3.68		3.69 3.73									
8-32		0.144 0.146	0.144 0.147		0.145 0.148		0.146 0.149		0.147 0.150		0.148 0.152										
M4.5 x 0.75				4.01 4.06		4.04 4.09		4.07 4.12		4.10 4.15		4.15 4.20									
10-24		0.163 0.165	0.163 0.166		0.164 0.167		0.165 0.168		0.166 0.170		0.168 0.173										
10-32		0.170 0.172	0.170 0.173		0.171 0.174		0.172 0.175		0.173 0.176		0.174 0.177										
M5 x 0.80						4.48 4.53		4.51 4.56		4.54 4.59		4.57 4.62									
12-24		0.189 0.191	0.189 0.192		0.190 0.193		0.191 0.194		0.192 0.196		0.193 0.197		0.195 0.200			0.198 0.203					
M6 x 1.00						5.35 5.42		5.38 5.45		5.41 5.48		5.44 5.51		5.49 5.56							
M6.3 x 1.00						5.65 5.72		5.68 5.75		5.71 5.78		5.74 5.81		5.79 5.86	5.85 5.91						
1/4-20					0.218 0.220		0.218 0.221		0.219 0.223		0.221 0.225		0.224 0.228			0.227 0.231		0.228 0.233	0.230 0.235		
M7 x 1.00						6.35 6.42		6.40 6.47		6.45 6.52		6.50 6.57		6.55 6.62	6.63 6.70		6.71 6.78				
5/16-18							0.277 0.279		0.278 0.280		0.279 0.281		0.280 0.283			0.281 0.285		0.283 0.288	0.285 0.290		
M8 x 1.25								7.19 7.27		7.22 7.30		7.25 7.33		7.30 7.38	7.35 7.43		7.43 7.51		7.51 7.59		
3/8-16											0.335 0.337		0.336 0.338			0.337 0.340		0.337 0.340	0.342 0.346	0.344 0.349	
M10 x 1.50								9.03 9.12		9.08 9.17		9.13 9.22		9.18 9.27	9.26 9.35		9.34 9.43		9.42 9.51	9.50 9.59	
7/16-14													0.392 0.395			0.394 0.397		0.396 0.400	0.398 0.402	0.401 0.405	0.404 0.409
M12 x 1.75										10.86 10.98		10.91 11.03		10.96 11.08	11.01 11.13		11.09 11.21		11.17 11.29	11.25 11.37	11.33 11.45
1/2-13																0.450 0.453		0.452 0.455	0.454 0.457	0.455 0.460	0.459 0.464

D HOLE DIAMETER

(Continued on next page)

Extruded Holes

Suggested extruded holes in light gauge steel for TAPTITE II® and DUO-TAPTITE® Screws and Bolts *(Continued from page 11)*

Approximate Material Thickness " T"

IN	.024 - .035		.042 - .048		0.060		0.09		0.106		0.122	
MM	0.61 - 0.89		1.07 - 1.22		1.52		2.29		2.69		3.10	
HOLE DIA. D	H	R	H	R	H	R	H	R	H	R	H	R
IN. 0.081 - .100	0.040	0.005	0.040	0.005	0.040	0.006	0.043	0.010				
MM 2.06 - 2.54	1.02	0.13	1.02	0.13	1.02	0.15	1.09	0.25				
IN. .101 - .130	0.047	0.005	0.047	0.005	0.047	0.006	0.052	0.010	0.054	0.010		
MM 2.57 - 3.30	1.19	0.13	1.19	0.13	1.19	0.15	1.32	0.25	1.37	0.25		
IN. .131 - .150	0.053	0.005	0.053	0.005	0.053	0.006	0.060	0.010	0.063	0.010	0.072	0.013
MM 3.33 - 3.81	1.35	0.13	1.35	0.13	1.35	0.15	1.52	0.25	1.60	0.25	1.83	0.33
IN. .151 - .180			0.060	0.005	0.081	0.006	0.070	0.010	0.075	0.010	0.087	0.013
MM 3.84 - 4.57			1.52	0.13	1.55	0.15	1.78	0.25	1.91	0.25	2.21	0.33
IN. .181 - .220			0.070	0.005	0.070	0.006	0.090	0.010	0.095	0.010	0.104	0.013
MM 4.60 - 5.59			1.78	0.13	1.78	0.15	2.29	0.25	2.41	0.25	2.64	0.33
IN. .221 - .260					0.075	0.006	0.100	0.010	0.105	0.010	0.120	0.013
MM 5.61 - 6.60					1.91	0.15	2.54	0.25	2.67	0.25	3.05	0.33
IN. .261 - .300					0.083	0.006	0.116	0.010	0.125	0.010	0.140	0.013
MM 6.63 - 7.62					2.11	0.15	2.95	0.25	3.18	0.25	3.58	0.33
IN. .301 - .340							0.130	0.010	0.140	0.010	0.164	0.013
MM 7.65 - 8.64							3.30	0.25	3.56	0.25	3.91	0.33
IN. .341 - .380							0.140	0.010	0.155	0.010	0.170	0.013
MM 8.66 - 9.65							3.56	0.25	3.94	0.25	4.32	0.33
IN. .381 - .430							0.150	0.010	0.170	0.010	0.184	0.013
MM 9.68 - 10.92							3.81	0.25	4.32	0.25	4.67	0.33

The above hole sizes are suggested starting points to be confirmed by actual testing. Extrusion dimensions can vary due to tooling design and material being extruded.

Suggested hole sizes for Aluminum or Zinc die castings For TAPTITE® and DUO-TAPTITE® Screws & Bolts

Screw Size	Hole Diameter as Cast Std. Taper				F Hole Dia. as Drilled	L Length of Thread Engagement	H Boss Dia.	J Distance to Edge for No Measurable Distortion-Min.
	Top A		Bottom B					
	Max.	Min.	Max.	Min.			Min.	
Metric Sizes (mm)								
M2 x 0.40	1.91	1.83	1.81	1.73	1.81	4.00	3.32	1.0
M2.5 x 0.45	2.39	2.31	2.28	2.20	2.28	5.00	4.15	1.2
M3 x 0.5	2.90	2.82	2.76	2.68	2.76	6.00	4.98	1.3
M3.5 x 0.6	3.31	3.23	3.21	3.13	3.21	7.00	5.81	1.6
M4 x 0.7	3.82	3.74	3.64	3.56	3.64	8.00	6.64	1.8
M4.5 x 0.75	4.31	4.23	4.11	4.03	4.11	9.00	7.47	2.0
M5 x 0.8	4.80	4.72	4.58	4.50	4.58	10.00	8.30	2.1
M6 x 1.0	5.74	5.66	5.48	5.40	5.48	12.00	9.96	2.6
M6.3 x 1.0	6.05	5.97	5.78	5.70	5.78	13.00	10.46	2.6
M7 x 1.0	6.78	6.70	6.48	6.40	6.48	14.00	11.62	2.6
M8 x 1.25	7.69	7.61	7.35	7.27	7.35	16.00	13.28	3.3
M10 x 1.5	9.64	9.56	9.22	9.14	9.22	20.00	16.60	3.9
M12 x 1.75	11.59	11.51	11.09	11.01	11.09	24.00	19.92	4.6
Inch Sizes (in)								
2-56	0.081	0.078	0.077	0.074	0.077	0.172	0.197	0.046
3-48	0.093	0.090	0.088	0.085	0.088	0.198	0.208	0.054
4-40	0.105	0.102	0.099	0.096	0.099	0.224	0.220	0.065
5-40	0.118	0.115	0.112	0.109	0.112	0.250	0.232	0.065
6-32	0.128	0.125	0.122	0.119	0.122	0.276	0.242	0.081
8-32	0.155	0.152	0.148	0.145	0.148	0.328	0.272	0.081
10-24	0.177	0.174	0.168	0.165	0.168	0.380	0.315	0.108
10-32	0.182	0.179	0.174	0.171	0.174	0.380	0.315	0.081
12-24	0.203	0.200	0.194	0.191	0.194	0.432	0.359	0.108
1/4-20	0.235	0.232	0.224	0.221	0.224	0.500	0.415	0.130
5/16-18	0.297	0.294	0.284	0.281	0.284	0.625	0.519	0.144
3/8-16	0.359	0.356	0.343	0.340	0.343	0.750	0.623	0.162
7/16-14	0.419	0.416	0.400	0.397	0.400	0.875	0.726	0.186
1/2-13	0.481	0.478	0.460	0.457	0.460	1.000	0.830	0.200

The minimum length of thread engagement should be equal to twice the diameter of the screw (to approach utilizing available screw strength). The hole diameter to ensure optimum performance should provide for 65% to 75% thread engagement.

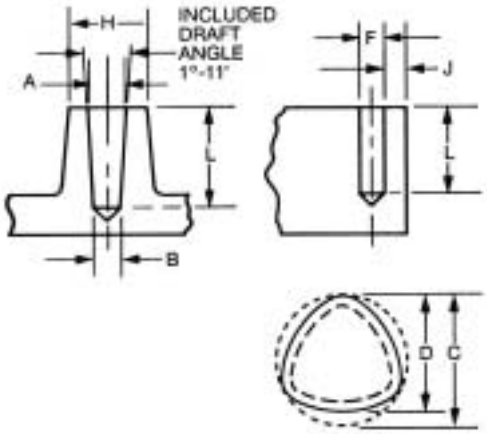

TAPTITE II®, TAPTITE®, DUO-TAPTITE®, and CORFLEX® are trademarks licensed by Research Engineering & Manufacturing Inc. (REMINC)